SIEMENS

Freezer

GI41N.. GI31N..

en User manual

Register your product on My Siemens and discover exclusive services and offers.
siemens-home.bsh-group.com/welcome

The future moving in.

Siemens Home Appliances

Table of contents

Safety 4
General information 4
Intended use 4
Restriction on user group 4
Safe transport 5
Safe installation 5
Safe use 6
Damaged appliance 8

Preventing material damage 10

Environmental protection and saving energy 10
Disposing of packaging 10
Saving energy 10

Installation and connection 11
Scope of delivery 11
Installing and connecting the appliance 11
Criteria for the installation location 12
Preparing the appliance for the first time 12
Connecting the appliance to the electricity supply 13

Familiarising yourself with your appliance 14
Appliance 14
Controls 15

Features 15
Freezer compartment flap 15
Accessories 15

Basic operation 16
Switching on the appliance 16
Operating tips 16
Switching off the appliance 16
Setting the temperature 16

Additional functions 16
Automatic Super freezing 16
Manual Super freezing 17

Alarm 17
Door alarm 17
Temperature alarm 17

Freezer compartment 18
Freezing capacity 18
Fully utilising the freezer compartment volume 18
Tips for buying frozen food 18
Tips for storing food in the freezer compartment 19
Freezing smaller amounts of food quickly 19
Tips for freezing fresh food 19
Shelf life of frozen food at −18 °C 20
Freezer calendar 20
Defrosting methods for frozen food 20

Defrosting 21
Defrosting in the freezer compartment 21

Cleaning and servicing 21
Preparing the appliance for cleaning 21
Cleaning the appliance 21
Removing the fittings 22

Troubleshooting 23
Malfunctions 23
Information on display panel 24
Temperature problem 24
Noise 24
Odours 25
Conducting an appliance self-test 26

Storage and disposal 26
Switching off the appliance 26
Disposing of old appliance 26

Customer Service..... 27
Product number (E-Nr.) and production number (FD)..... 27

Technical data 27

Safety

Please read the safety information to ensure that you use the appliance safely.

General information

You can find general information for this instruction manual here.

- Read this instruction manual carefully. Only this will ensure you use the appliance safely and efficiently.
- This manual is intended for the user of the appliance.
- Follow the safety instructions and warnings.
- Keep the instruction manual and the product information safe for future reference or for the next owner.
- Check the appliance after unpacking it. Do not connect the appliance if it has been damaged in transit.

Intended use

Read the information on intended use to ensure that you use the appliance correctly and safely.
This appliance is only intended to be fully fitted in a kitchen.
Only use this appliance:

- As specified in this instruction manual.
- For freezing food and making ice.
- In private households and in enclosed spaces in a domestic environment.
- Up to an altitude of max. 2000 m above sea level.

Restriction on user group

Avoid risks to children and vulnerable persons.
This appliance may be used by children aged 8 or over and by people who have reduced physical, sensory or mental abilities or inadequate experience and/or knowledge, provided that they are supervised or have been instructed on how to use the appliance safely and have understood the resulting dangers.
Children must not play with the appliance.

Cleaning and user maintenance must not be performed by children unless they are being supervised.
Keep children under the age of 8 years away from the appliance and power cable.
Children above the age of three years old and younger than eight years old may load and unload the the fridge-freezer.

Safe transport

Follow these safety instructions when transporting the appliance.

⚠ **WARNING – Risk of injury!**
The high weight of the appliance may result in injury when lifted.
- ▶ Do not lift the appliance on your own.

Safe installation

Follow these safety instructions when installing the appliance.

⚠ **WARNING – Risk of electric shock!**
- Improper installation is dangerous.
  - ▶ Connect and operate the appliance only in accordance with the specifications on the rating plate.
  - ▶ Connect the appliance to a power supply with alternating current only via a properly installed socket with earthing.
  - ▶ The protective conductor system of the domestic electrical installation must be properly installed.
  - ▶ Never equip the appliance with an external switching device, e.g. a timer or remote control.
  - ▶ When the appliance is installed, the mains plug of the power cord must be freely accessible. If free access is not possible, an all-pole isolating switch must be installed in the permanent electrical installation according to the installation regulations.
  - ▶ When installing the appliance, check that the power cable is not trapped or damaged.

- If the insulation of the power cord is damaged, this is dangerous.
  - ▶ Never let the power cord come into contact with heat sources.
  - ▶ Never let the power cord come into contact with sharp points or edges.
  - ▶ Never kink, crush or modify the power cord.

⚠ **WARNING – Risk of explosion!**
If the appliance's ventilation openings are sealed, a leak in the refrigeration circuit may result in a flammable mixture of gas and air.
- ▶ Keep ventilation openings, in the appliance enclosure or in the built-in structure, clear of obstruction.

⚠ **WARNING – Risk of fire!**
- It is dangerous to use an extended power cord and non-approved adapters.
  - ▶ Do not use extension cables or multiple socket strips.
  - ▶ If the power cord is too short, contact Customer Service.
  - ▶ Only use adapters approved by the manufacturer.
- Portable multiple socket strips or portable power supply units may overheat and cause a fire.
  - ▶ Do not place portable multiple socket strips or power supply units on the back of the appliance.

Safe use

Follow these safety instructions when using the appliance.

⚠ **WARNING – Risk of electric shock!**
An ingress of moisture can cause an electric shock.
- ▶ Only use the appliance in enclosed spaces.
- ▶ Never expose the appliance to intense heat or humidity.
- ▶ Do not use steam- or high-pressure cleaners to clean the appliance.

⚠ WARNING – Risk of suffocation!

- Children may put packaging material over their heads or wrap themselves up in it and suffocate.
  - ▶ Keep packaging material away from children.
  - ▶ Do not let children play with packaging material.
- Children may breathe in or swallow small parts, causing them to suffocate.
  - ▶ Keep small parts away from children.
  - ▶ Do not let children play with small parts.

⚠ WARNING – Risk of explosion!

- Mechanical devices or other devices may damage the refrigeration circuit; flammable refrigerant may escape and explode.
  - ▶ To accelerate the defrosting process, do not use any other mechanical devices or devices other than those recommended by the manufacturer.
- Products which contain flammable propellants and explosive substances may explode, e.g. spray cans.
  - ▶ Do not store products which contain flammable propellants (e.g. spray cans) or explosive substances in the appliance.

⚠ WARNING – Risk of fire!

Electrical devices within the appliance may cause a fire, e.g. heaters or electric ice makers.

- ▶ Do not operate electrical devices within the appliance.

⚠ WARNING – Risk of injury!

- Containers that contain carbonated drinks may burst.
  - ▶ Do not store containers that contain carbonated drinks in the freezer compartment.
- Injury to the eyes caused by escaping flammable refrigerant and hazardous gases.
  - ▶ Do not damage the tubes of the refrigerant circuit or the insulation.

⚠ **WARNING – Risk of cold burns!**
Contact with frozen food and cold surfaces may cause burns by refrigeration.
- ▶ Never put frozen food straight from the freezer compartment into your mouth.
- ▶ Avoid prolonged contact of skin with frozen food, ice and the tubes in the freezer compartment.

⚠ **CAUTION – Risk of harm to health!**
To prevent food from being contaminated, you must observe the following instructions.
- ▶ If the door is open for an extended period of time, this may lead to a considerable temperature increase in the compartments of the appliance.
- ▶ Regularly clean the surfaces that may come into contact with food and accessible drain systems.
- ▶ If the fridge/freezer is empty for an extended period of time, switch off the appliance, defrost it, clean it and leave the door open to prevent the formation of mould.

Damaged appliance

Follow the safety instructions if your appliance is damaged.

⚠ **WARNING – Risk of electric shock!**
- If the appliance or the power cord is damaged, this is dangerous.
  - ▶ Never operate a damaged appliance.
  - ▶ Never operate an appliance with a cracked or fractured surface.
  - ▶ Never pull on the power cord to unplug the appliance. Always unplug the appliance at the mains.
  - ▶ If the appliance or the power cord is damaged, immediately unplug the power cord or switch off the fuse in the fuse box.
  - ▶ "Call Customer Service." → *Page 27*
  - ▶ Repairs to the appliance should only be carried out by trained specialist staff.

- Incorrect repairs are dangerous.
  - ▶ Repairs to the appliance should only be carried out by trained specialist staff.
  - ▶ Only use genuine spare parts when repairing the appliance.
  - ▶ If the power cord of this appliance is damaged, it must be replaced by the manufacturer, the manufacturer's Customer Service or a similarly qualified person in order to prevent any risk.

⚠ **WARNING – Risk of fire!**

If the tubes are damaged, flammable refrigerant and harmful gases may escape and ignite.

- ▶ Keep naked flames and ignition sources away from the appliance.
- ▶ Ventilate the room.
- ▶ "Switch off the appliance." → *Page 16*
- ▶ Unplug the appliance from the mains or switch off the circuit breaker in the fuse box.
- ▶ "Call after-sales service." → *Page 27*

Preventing material damage

Follow these instructions to prevent material damage to your appliance, accessories or other objects in your kitchen.

ATTENTION!

- Using the base, runners or appliance doors as a seat surface or climbing surface may damage the appliance.
  - ▸ Do not stand or support yourself on the base, runners or doors.
- Contamination with oil or fat may cause plastic parts and door seals to become porous.
  - ▸ Keep plastic parts and door seals free of oil and grease.

Environmental protection and saving energy

Help protect the environment by using your appliance in a way that conserves resources and by disposing of reusable materials properly.

Disposing of packaging

The packaging materials are environmentally compatible and can be recycled.

▸ Sort the individual components by type and dispose of them separately.

Information about current disposal methods are available from your specialist dealer or local authority.

Saving energy

If you follow these instructions, your appliance will use less power.

Selecting the installation location

Follow these instructions when installing your appliance.

- Keep the appliance out of direct sunlight.
- Install the appliance as far away as possible from heating elements, cookers and other heat sources:
  - – Maintain a 30 mm clearance to electric or gas cookers.
  - – Maintain a 30 cm clearance to oil or solid-fuel cookers.

+ The appliance needs to cool less frequently at low ambient temperatures.

- Use a niche depth of 560 mm.
- Do not cover or block ventilation openings.

+ The air on the back wall of the appliance can escape more easily and the appliance does not warm up so intensely.
  The appliance must cool less frequently.

Saving energy during use

Follow these instructions when using your appliance.

Note: The arrangement of the fittings does not affect the energy consumption of the appliance.

- Do not cover or block ventilation openings.

+ The air on the back wall of the appliance can escape more easily and the appliance does not warm up so intensely.

- Open the appliance door only briefly.
- Transport purchased food in a cool bag and place in the appliance quickly.
- Allow warm food and drinks to cool down before placing them in the appliance.

+ The air in the appliance does not warm up so intensely.
  The appliance must cool less frequently.

- Always leave some space between the food and to the back panel.
- Pack the food airtight.

+ The air can circulate and the air humidity remains constant.

- Only open the freezer compartment door briefly and then carefully close it.

+ A closed freezer compartment door protects the freezer compartment against severe icing.

Installation and connection

You can find out where and how best to install your appliance here. You will also learn how to connect your appliance to the power supply.

Scope of delivery

After unpacking all parts, check for any transport damage and for completeness of delivery.
If you have any complaints, contact your dealer or our "after-sales service" → *Page 27*.

The delivery consists of the following:
- Built-in appliance
- Equipment and accessories[1]
- Installation material
- Installation instructions
- User manual
- Customer service booklet
- Warranty enclosure[2]
- Energy label
- Information on energy consumption and noises

Installing and connecting the appliance

Requirement: "The scope of delivery of the appliance is checked."
→ *Page 11*

1. "Observe the criteria for the appliance's installation location."
   → *Page 12*
2. Install the appliance according to the enclosed installation instructions.
3. "Prepare the appliance for first use." → *Page 12*

[1] Depending on the appliance specifications

[2] Not in all countries

4. "Electrically connect the appliance." → *Page 13*

Criteria for the installation location

Follow these instructions when installing your appliance.

⚠ **WARNING**
Risk of explosion!
If the appliance is in a space that is too small, a leak in the refrigeration circuit may result in a flammable mixture of gas and air.
- Only install the appliance in a space with a volume of at least 1 m^3 per 8 g refrigerant. The volume of refrigerant is indicated on the rating plate. → *"Appliance", Fig.* 1/4, *Page 14*

The weight of the appliance ex works may be up to 50 kg depending on the model.
The subfloor must be of sufficient stability to bear the weight of the appliance.

Permitted room temperature

The permitted room temperature depends on the appliance's climate class.
The climate class can be found on the rating plate. → *"Appliance", Fig.* 1/4, *Page 14*

Climate class	Permitted room temperature
SN	10 °C to 32 °C
N	16 °C to 32 °C
ST	16 °C to 38 °C
T	16 °C to 43 °C

The appliance is fully functional within the permitted room temperature.

If an appliance with climate class SN is operated at colder room temperatures, the appliance will not be damaged up to a room temperature of 5 °C.

Niche dimensions

Observe the niche dimensions if you install your appliance in the niche. If this is not the case, problems may occur when installing the appliance.

Niche depth

Install the appliance in the recommended niche depth of 560 mm.
If the niche depth is smaller, the energy consumption increases slightly.
The niche depth must be a minimum 550 mm.

Niche width

An inside niche width of at least 560 mm is required for the appliance.

Side-by-side installation

If, in addition to this appliance, you want to operate another appliance featuring a freezer compartment, you must maintain a distance of at least 150 mm between the appliances.
If you do not observe the minimum distance, you can only set up this appliance next to 556 mm wide appliances without a freezer compartment.

Preparing the appliance for the first time

1. Remove the informative material.
2. Remove the protective foil and transit bolts, e.g. remove the adhesive strips and carton.
3. "Clean the appliance for the first time." → *Page 21*

Connecting the appliance to the electricity supply

1. Insert the mains plug of the appliance's power cable in a socket nearby.

   The connection data of the appliance can be found on the rating plate. → *"Appliance", Fig.* 1/4, *Page 14*
2. Check the mains plug is inserted properly.

✔ The appliance is now ready for use.

Familiarising yourself with your appliance

Familiarise yourself with the parts of your appliance.

Appliance

You can find an overview of the parts of your appliance here.

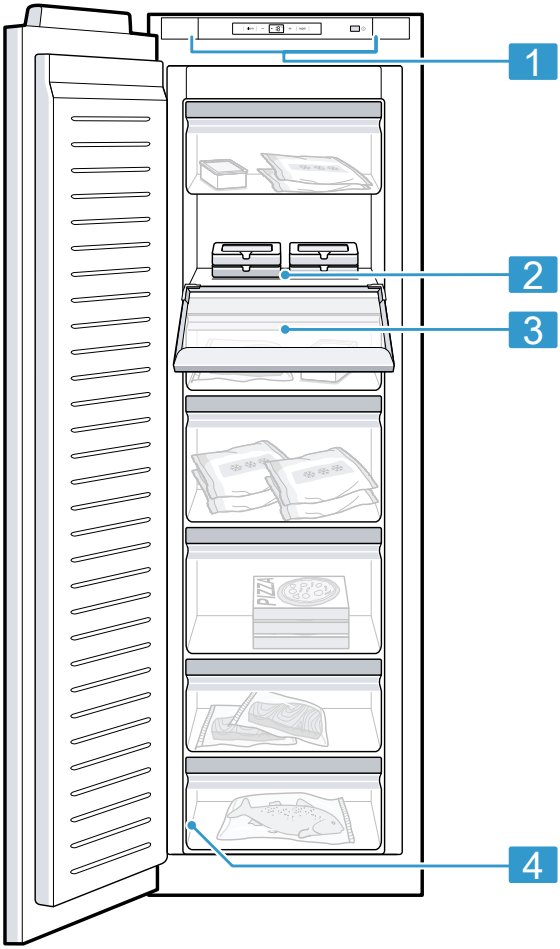

1

1	Controls	3	Freezer compartment flap
2	Freezer compartment shelf	4	Rating plate

Note: Deviations between your appliance and the diagrams may differ with regard to their features and size.

Controls

The controls are used to configure all functions of your appliance and to obtain information about the operating status.

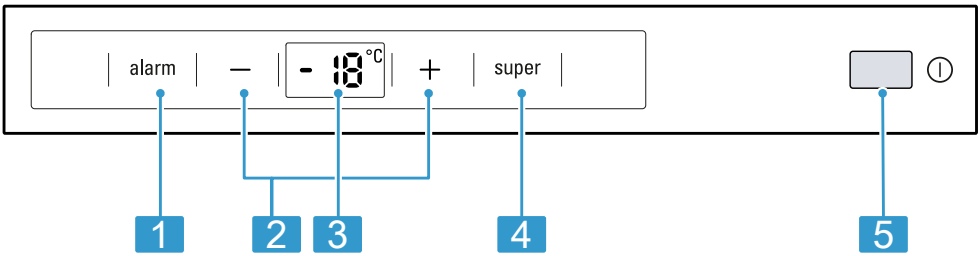

2

1	alarm switches the warning signal off.
2	–/+ sets the temperature of the freezer compartment.
3	Displays the set temperature for the freezer compartment in °C.
4	super switches Super freezing on or off.
5	⏻ switches the appliance on or off.

Features

Here you can see an overview of the features of your appliance and their use.
The features of your appliance depend on the model.

Freezer compartment flap

Store food that is used frequently or that only needs to be stored for a short time on the shelf behind the freezer-compartment flap.

Accessories

Only use original accessories. These have been made especially for your appliance. Here you can find an overview of your appliance's accessories and how to use them.
The accessories for your appliance depend on the model.

Ice pack

Use the ice pack for temporarily keeping food cool, e.g. in a cool bag.

Tip: If a power failure or malfunction occurs, the ice pack can be used to slow down the thawing process for the stored frozen food.

Ice cube tray

Use the ice cube tray to make ice cubes.

Making ice cubes

1. Fill the ice cube tray with water up to ¾ and place in the freezer compartment.

   If the ice cube tray is stuck to the freezer compartment, loosen it with a blunt implement only (e.g. spoon handle).
2. To loosen the ice cubes, twist the ice cube tray slightly or hold it briefly under flowing water.

Basic operation

You can find out everything you need to know about operating your appliance here.

Switching on the appliance

1. Press ⏻.
✔ The appliance begins to cool.
✔ A warning signal sounds and alarm lights up because the freezer compartment is still too warm.
2. Switch off the warning signal with alarm.
✔ alarm goes out as soon as the set temperature has been reached.
3. "Set the required temperature." → *Page 16*

Operating tips

- Once you have switched on the appliance, the set temperature is only reached after several hours. Do not put any food in the appliance until the temperature has been reached.
- The front panels of the housing are temporarily heated slightly. This prevents condensation in the area of the door seal.
- When you close the door, a vacuum may be created. The door is then difficult to open again. Wait a moment until the vacuum is offset.

Switching off the appliance

▸ Press ⏻.
✔ The appliance stops cooling.

Setting the temperature

After you have switched on the appliance, you can set the temperature.

Setting the freezer compartment temperature

▸ Press –/+ repeatedly until the temperature display shows the required temperature.

  The recommended temperature in the freezer compartment is –18 °C.

Additional functions

Find out which additional functions which can be used for your appliance.

Automatic Super freezing

Automatic Super freezing automatically switches on when warm food is placed in the freezer.
With automatic Super freezing, the freezer compartment cools down to a much lower temperature than for normal mode. This freezes food quickly right through to the centre.

If the automatic Super freezing is switched on, super lights up and increased noises may occur.
After operation, the appliance switches from automatic Super freezing to normal operation.

Cancelling automatic Super freezing

- Press super.
- ✔ The previously set temperature is displayed.

Manual Super freezing

Super freezing cools the freezer compartment as cold as possible. This freezes food quickly right through to the centre.
Switch on Super freezing four to six hours before placing food weighing 2 kg or more into the freezer compartment.
In order to utilise the freezer capacity, use Super freezing.
→ *"Prerequisites for freezing capacity", Page 18*

Note: When Super freezing is switched on, increased noise may occur.

Switching on manual Super freezing

- Press super.
- ✔ super lights up.

Note: After approx. 60 hours, the appliance switches to normal operation.

Switching off manual Super freezing

- Press super.
- ✔ The previously set temperature is displayed.

Alarm

Your appliance is equipped with alarm functions.

Door alarm

If the appliance door is open for a longer period, the door alarm switches on.

Switching off the warning tone (door alarm)

- Close the appliance door or press alarm.
- ✔ The warning tone is switched off.

Temperature alarm

If the freezer compartment becomes too warm, the temperature alarm is switched on.

⚠ **CAUTION**
Risk of harm to health!
During the thawing process, bacteria may multiply and spoil the frozen food.
- Do not refreeze food after it has been defrosted or started to defrost.
- Refreeze food only after cooking.
- These items should no longer be stored for the maximum storage period.

The temperature alarm can be switched on without risk to the frozen food in the following cases:
- The appliance is switched on.
- When large quantities of fresh food are put in.
- The freezer compartment door is open for too long.

Switching off the warning tone (temperature alarm)

- Press alarm.

- ✔ The warning tone is switched off.
- ✔ The temperature display briefly shows the warmest temperature reached in the freezer compartment. The temperature display then shows the set temperature again.
- ✔ From this time on, the warmest temperature is measured again and saved.
- ✔ alarm lights up until the set temperature is reached again.

Freezer compartment

You can store frozen food, freeze food and make ice cubes in the freezer compartment.
The temperature can be set from −16 °C to −24 °C.
Long-term storage of food should be at −18 °C or lower.
The freezer compartment can be used to store perishable food long-term. The low temperatures slow down or stop the spoilage.
The time between putting fresh food in the freezer compartment and it freezing solid depends on various factors:

- Set temperature
- Food (size and type)
- Quantity and type of storage
- Quantity and type of food already stored

Freezing capacity

The maximum freezing capacity indicates the quantity of food that can be frozen right through to the centre within a specific period of time. Information on the maximum freezing capacity can be found on the rating plate. → *"Appliance", Fig.* 1/4, *Page 14*

Prerequisites for freezing capacity

1. Approx. 24 hours before placing fresh food in the appliance, switch on Super freezing.
   → *"Switching on manual Super freezing", Page 17*
2. Fill the front area of the top compartment with food first. This is where the food freezes most quickly.
3. If the front area of the top compartment does not have enough space, store the remaining quantity in the compartment below.

Fully utilising the freezer compartment volume

Learn how to store the maximum amount of frozen food in the freezer compartment.

1. "Remove all fittings." → *Page 22*
2. Store food directly on the shelves and on the floor of the freezer compartment.

Tips for buying frozen food

Follow the tips when you are buying frozen food.

- Check the packaging is not damaged.
- Check the best-before date.
- The temperature in the supermarket freezer must be −18 °C or lower.
- Do not interrupt the deep-freeze chain. If possible, transport frozen food in a cool bag and quickly place it in the freezer compartment.

Tips for storing food in the freezer compartment

Follow the tips if you are storing food in the freezer compartment.

- To quickly and gently freeze larger quantities of fresh food, place this in the top frozen food container.
- Place the food over the whole area of the compartments or the frozen food containers.
- Do not bring food which is to be frozen into contact with frozen food.
  If necessary, redistribute frozen food in the freezer compartment.
- To ensure that the air can circulate freely in the appliance, push the frozen food containers in as far as they will go.

Freezing smaller amounts of food quickly

Observe the instructions when you want to freeze a smaller amount of food quickly.

1. Add the food to the second frozen food container from the bottom, starting from the right.
2. Spread the food over a wide area in the freezer compartment.

Tips for freezing fresh food

Follow the tips when you freeze fresh food.

- Freeze fresh and undamaged food only.
- Cooked food is more suitable than food that can be eaten raw.
- In order to retain the nutritional value, flavour and colour, you should prepare certain food for freezing.
  - Vegetables: Wash, chop up, blanch.
  - Fruit: Wash, pit and perhaps peel, possibly add sugar or ascorbic acid solution.

Additional information on how to do this can be found in the relevant literature.

Food suitable for freezing

- Baked goods
- Fish and seafood
- Meat
- Poultry and game
- Vegetables, fruit and herbs
- Eggs without shells
- Dairy products, e.g. cheese, butter and quark
- Ready meals and leftovers, e.g. soups, stews, cooked meat and fish, potato dishes, bakes and desserts

Food that is unsuitable for freezing

- Types of vegetables that are usually eaten raw, e.g. lettuce or radishes
- Unpeeled or hard-boiled eggs
- Grapes
- Whole apples, pears and peaches
- Yoghurt, soured milk, sour cream, crème fraîche and mayonnaise

Packing frozen food

If you select suitable packaging material and the correct type of packaging, you can determine the product quality and prevent freezer burn.

1. Place the food in the packaging.

   Suitable packaging:
   - Plastic film made of polyethylene
   - Tubular film made of polyethylene
   - Freezer bags made from polyethylene
   - Freezer containers

   Unsuitable packaging:
   - Wrapping paper

- Greaseproof paper
- Cellophane
- Aluminium foil
- Rubbish bags and used shopping bags

2. Squeeze out the air.
3. Pack food airtight to prevent it from losing flavour and drying out.

   Suitable seals:
   - Rubber bands
   - Plastic clips
   - Cold-resistant adhesive tape
4. Label the packaging with the contents and the date of freezing.

Shelf life of frozen food at –18 °C

Observe the storage times when you freeze food.

Food	Storage time
Fish, sausages, prepared meals and baked goods	Up to 6 months
Poultry, meat	Up to 8 months
Vegetables, fruit	Up to 12 months

Freezer calendar

The imprinted freezer calendar indicates the maximum storage duration in months at a constant temperature of –18 °C.

Defrosting methods for frozen food

To retain the best-possible product quality, the defrosting method must be adjusted to the food and application.

⚠ **CAUTION**
Risk of harm to health!
During the thawing process, bacteria may multiply and spoil the frozen food.

- ▸ Do not refreeze food after it has been defrosted or started to defrost.
- ▸ Refreeze food only after cooking.
- ▸ These items should no longer be stored for the maximum storage period.

Defrosting method	Food
Refrigerator compartment	Animal-based food such as fish, meat, cheese, quark
Room temperature	Bread
Microwave	Food for immediate consumption or immediate preparation
Oven or cooker	Food for immediate consumption or immediate preparation

Defrosting

Observe the information when you want to defrost your appliance.

Defrosting in the freezer compartment

The fully automatic NoFrost system ensures that the freezer compartment remains frost-free. Defrosting is not required.

Cleaning and servicing

To keep your appliance working efficiently for a long time, it is important to clean and maintain it carefully. Customer Service must clean inaccessible points. Cleaning by customer service can give rise to costs.

Preparing the appliance for cleaning

Find out how to prepare your appliance for cleaning.

1. "Switch off the appliance." → *Page 16*
2. Disconnect the appliance from the power supply.

   Unplug the appliance from the mains or switch off the circuit breaker in the fuse box.
3. Take out all of the food and store it in a cool place.

   Place ice packs (if available) onto the food.
4. "Remove all fittings from the appliance." → *Page 22*

Cleaning the appliance

Clean the appliance as specified to ensure that it is not damaged by incorrect cleaning or unsuitable cleaning products.

⚠ **WARNING**
Risk of electric shock!

- An ingress of moisture can cause an electric shock.
  - ▸ Do not use steam- or high-pressure cleaners to clean the appliance.
- Liquid in the lighting can be dangerous.
  - ▸ The rinsing water must not run into the light.

ATTENTION!

- Unsuitable cleaning products may damage the surfaces of the appliance.
  - ▸ Do not use hard scouring pads or cleaning sponges.
  - ▸ Do not use harsh or abrasive detergents.
  - ▸ Do not use cleaning products with a high alcohol content.
- If you clean fittings and accessories in the dishwasher, this may cause them to become deformed or discolour.
  - ▸ Never clean fittings and accessory in the dishwasher.

1. "Prepare the appliance for cleaning." → *Page 21*
2. Clean the appliance, the fittings and the door seals with a dish cloth, lukewarm water and a little pH-neutral washing-up liquid.
3. Dry thoroughly with a soft, dry cloth.
4. Insert the fittings.
5. Electrically connect the appliance.
6. "Switch on the appliance." → *Page 16*

7. Putting the food into the appliance.

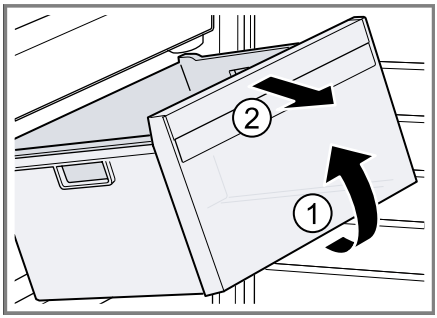

Removing the fittings

If you want to clean the fittings thoroughly, remove these from your appliance.

Removing the freezer flap

- Open the freezer compartment flap and release from the holder.

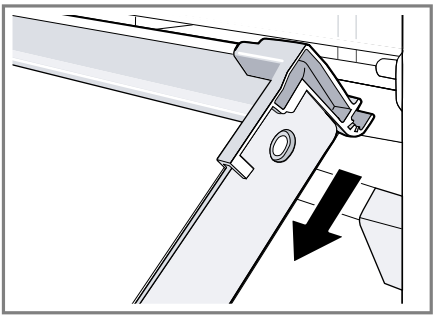

Removing the freezer compartment shelf

- Pull out the freezer compartment shelf and remove it.

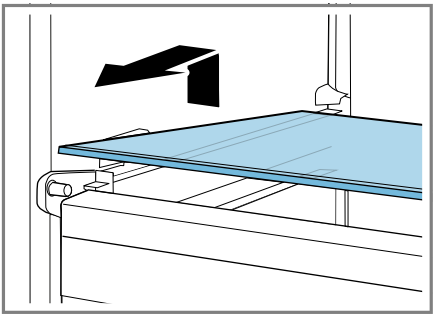

Removing the frozen food container

1. Take out the frozen food container as far as it will go.
2. Lift the frozen food container at the front ① and remove it ②.

Troubleshooting

You can rectify minor faults on your appliance yourself. Read the troubleshooting information before contacting after-sales service. This will avoid unnecessary costs.

⚠ **WARNING**
Risk of electric shock!
Incorrect repairs are dangerous.
- ▸ Repairs to the appliance should only be carried out by trained specialist staff.
- ▸ Only use genuine spare parts when repairing the appliance.
- ▸ If the power cord of this appliance is damaged, it must be replaced by the manufacturer, the manufacturer's Customer Service or a similarly qualified person in order to prevent any risk.

Malfunctions

Fault	Cause	troubleshooting
The appliance is not working. No displays light up.	The mains plug has not been inserted properly.	▸ Check whether the mains plug for the power cord is fully inserted into the socket.
	Fuse has been tripped.	▸ Check the fuses.
	The power has failed.	1. Check whether the power is on. 2. Place ice packs (if available) on the frozen food.
The appliance is not cooling, the displays and lighting light up.	Showroom mode is switched on.	▸ "Carry out the appliance self-test." → *Page 26* ✔ Once the appliance self-test has ended, the appliance switches to normal operation.
The refrigeration unit is switching on more frequently and for longer.	The appliance door was opened frequently.	▸ Do not open appliance door unnecessarily.
	The ventilation openings are covered up.	▸ Remove any obstructions from in front of the ventilation openings.
Automatic Super freezing does not switch on.	Not a fault. The appliance decides independently whether automatic Super freezing is required, and switches it on or off automatically.	No action required.

Information on display panel

Fault	Cause	troubleshooting
E or d appears in the temperature display.	The electronics have detected a fault.	▶ Call the after-sales service. → *"Customer Service", Page 27*
Temperature display flashes.	Different causes are possible.	▶ Press alarm. ✔ The alarm is switched off.
	The appliance door is open.	▶ Close the appliance door.
	The ventilation openings are covered up.	▶ Remove any obstructions from in front of the ventilation openings.
	Larger quantities of fresh food have been put in.	▶ Do not exceed the max. freezing capacity. → *"Freezing capacity", Page 18*
The temperature display flashes, a warning signal sounds and alarm lights up.	Different causes are possible.	▶ Press alarm. ✔ The alarm is switched off.
	The appliance door is open.	▶ Close the appliance door.
	The ventilation openings are covered up.	▶ Remove any obstructions from in front of the ventilation openings.
	Larger quantities of fresh food have been put in.	▶ Do not exceed the max. freezing capacity. → *"Freezing capacity", Page 18*

Temperature problem

Fault	Cause	troubleshooting
The temperature differs greatly from the setting.	Different causes are possible.	1. "Switch off the appliance." → *Page 16* 2. "Switch the appliance back on after five minutes." → *Page 16* – If the temperature is too warm, check the temperature again after a couple of hours. – If the temperature is too cold, check the temperature again on the following day.

Noise

Fault	Cause	troubleshooting
Appliance has a humming sound.	Not a fault. A motor is running, e.g. refrigerating unit, fan.	No action required.

Fault	Cause	troubleshooting
The appliance bubbles, buzzes or gargles.	Not a fault. Refrigerant flows through the pipes.	No action required.
The appliance clicks.	Not a fault. Motor, switches or solenoid valves are switching on or off.	No action required.
Appliance crackles.	Not a fault. Automatic defrosting is running.	No action required.
The appliance makes noises.	Fittings wobble or stick.	▶ Check the removable fittings and, if required, replace these.
	Containers are touching.	▶ Move the containers apart.
	Super freezing is switched on.	No action required.

Odours

Fault	Cause	troubleshooting
The appliance has an unpleasant smell.	Different causes are possible.	1. "Prepare the appliance for cleaning." → *Page 21* 2. "Clean the appliance." → *Page 21* 3. Clean all food packaging. 4. To prevent odours from forming, store strong smelling food in airtight containers. 5. After 24 hours, check whether odours are still forming.

Conducting an appliance self-test

1. "Switch off the appliance." → *Page 16*
2. "Switch the appliance back on after approx. five minutes." → *Page 16*
3. Within the first 10 seconds after switching on, press and hold super for 3 to 5 seconds until an audible signal sounds.

✔ The appliance self-test starts.
✔ While the appliance self-test is running, a long audible signal sounds.
✔ If, at the end of the appliance self-test, two audible signals sound and the temperature display indicates the set temperature, your appliance is OK. The appliance then switches to normal operation.
✔ If, at the end of the appliance self-test, five audible signals sound and super flashes for 10 seconds, inform the after-sales service.

Storage and disposal

You can find out here how to prepare your appliance for storage. You will also find out how to dispose of old appliances.

Switching off the appliance

1. "Switch off the appliance." → *Page 16*
2. Disconnect the appliance from the power supply.

   Unplug the appliance from the mains or switch off the circuit breaker in the fuse box.
3. "Defrost the appliance." → *Page 21*
4. "Clean the appliance." → *Page 21*
5. To ensure the ventilation inside the appliance, leave the appliance open.

Disposing of old appliance

Valuable raw materials can be re-used by recycling.

⚠ **WARNING**
Risk of harm to health!
Children can lock themselves in the appliance, thereby putting their lives at risk.
- Leave shelves and containers inside the appliance to prevent children from climbing in.
- Keep children away from the redundant appliance.

⚠ **WARNING**
Risk of fire!
If the tubes are damaged, flammable refrigerant and harmful gases may escape and ignite.
- Do not damage the tubes of the refrigerant circuit or the insulation.

1. Unplug the appliance from the mains.
2. Cut through the power cord.
3. Dispose of the appliance in an environmentally friendly manner.

This appliance is labelled in accordance with European Directive 2012/19/EU concerning used electrical and electronic appliances (waste electrical and electronic equipment - WEEE). The guideline determines the framework for the return and recycling of used appliances as applicable throughout the EU.

Customer Service

If you have any queries, are unable to rectify faults on the appliance yourself or if your appliance needs to be repaired, contact Customer Service. You can solve many problems yourself by consulting the information on troubleshooting in these instructions or on our website. If this is not the case, contact our after-sales service. We will always find an appropriate solution and try to avoid unnecessary visits being made by a Customer Service technician.
With any warranty claims, we will make sure that your appliance is repaired by trained after-sales technicians using genuine spare parts, including after the manufacturer's warranty has expired.
For safety reasons repairs to the appliance should only be carried out by trained specialist staff. The warranty claim becomes void if repairs or interventions have been carried out by persons not authorised by us for that purpose or if our appliances have been fitted with spare, supplementary or accessory parts that were not genuine parts and then resulted in a defect.
Function-relevant genuine spare parts according to the corresponding Ecodesign Order can be obtained from Customer Service for a period of at least 10 years from the date on which your appliance was placed on the market within the European Economic Area.

Note: Under the terms of the manufacturer's warranty applicable to the location, the use of Customer Service is free of charge. The minimum duration of the warranty (manufacturer's warranty for private consumers) in the European Economic Area is 2 years according to the terms of warranty applicable to the location. The terms of warranty do not affect other rights or claims held by yourself under local legislation.

Detailed information on the warranty period and terms of warranty in your country is available from our after-sales service, your retailer or on our website.
If you contact Customer Service, you will require the product number (E-Nr.) and the production number (FD) of your appliance.
The contact details for Customer Service can be found in the enclosed Customer Service directory or on our website.

Product number (E-Nr.) and production number (FD)

You can find the product number (E-Nr.) and the production number (FD) on the appliance's rating plate.
→ *"Appliance", Fig.* **1**/**4**, *Page 14*
Make a note of your appliance's details and the Customer Service telephone number to find them again quickly.

Technical data

Refrigerant, cubic capacity and further technical specifications can be found on the rating plate.
→ *"Appliance", Fig.* **1**/**4**, *Page 14*
More information about your model can be found online at https://energylabel.bsh-group.com[1]. This web address is linked to the official EU EPREL product database. At the time

[1] Only applies to countries in the European Economic Area

of printing its web address had not yet been published. Please then follow the instructions on searching for models. The model identifier is made up of the characters before the slash in the product number (E-Nr.) on the rating plate. Alternatively you can also find the model identifier in the first line of the EU energy label.

BSH Hausgeräte GmbH
Carl-Wery-Straße 34
81739 München
GERMANY
www.siemens-home.bsh-group.com

Manufactured by BSH Hausgeräte GmbH under Trademark License of Siemens AG

9001485271 (000707)
en